ARCHITECTS & ENGINEER
SUBMITTAL SHEET

Genuine Comfort AA Series Standard PTAC

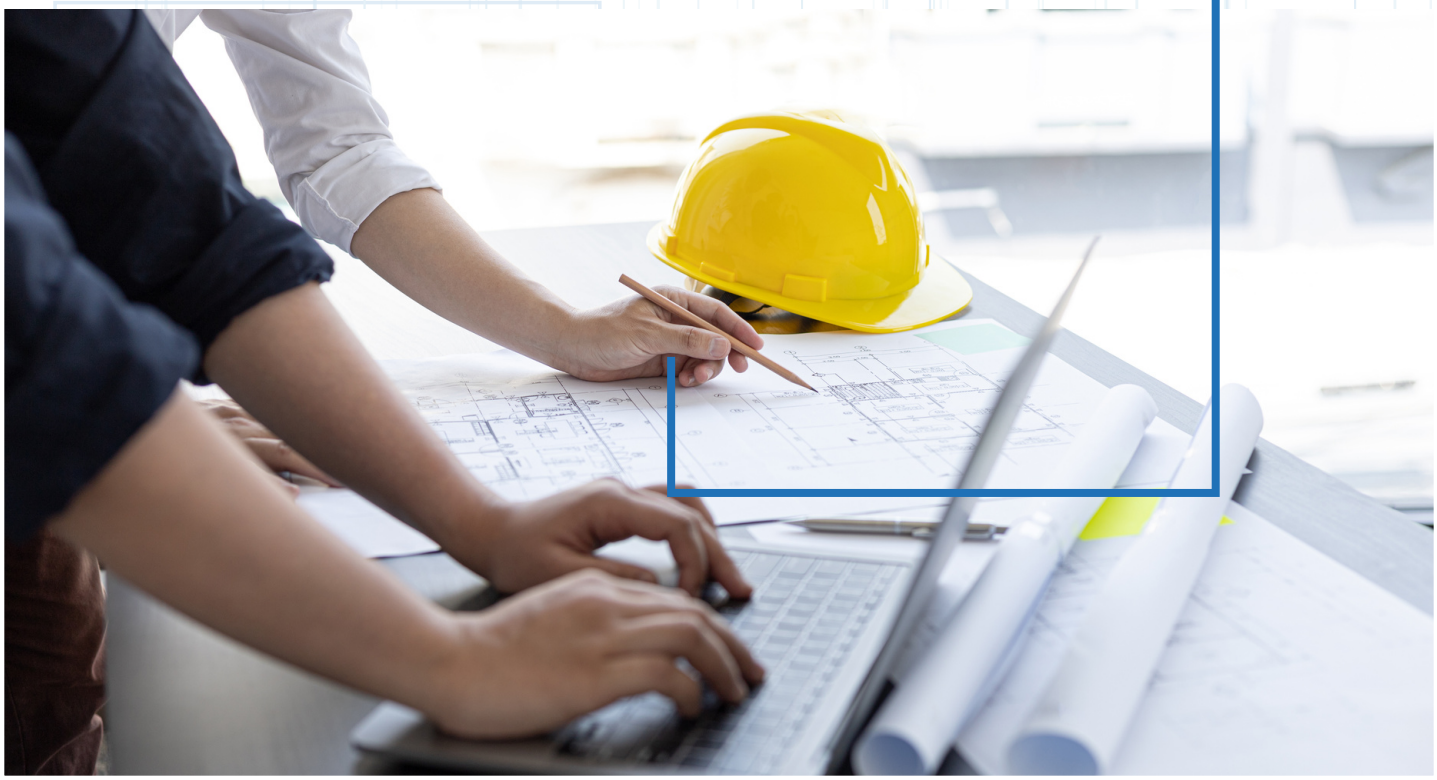

GENUINE COMFORT
DELIVERING COMFORT CONSISTENTLY

Packaged Terminal Air Conditioner

Job Name:		Engineer:	
Pruchaser:		Architect:	
Unit No.:		Contractor:	
Schedule:		Submitted to:	
Location:		Submitted by:	
Comment:		Date Submited:	

SUBMITTAL SHEET

Genuine Comfort AA Series Standard PTAC

Unit Size: 34-1/2"W x 14-1/8"H x 19-5/8"D

FEATURES

- Digital controls
- Error Code Display For Easy Diagnostic
- 2 Indoor Fan Speeds
- Dual Motors for Quiet & Efficient Operation
- 24 Volt Wall Thermostat Control Option
- Compressor Time Delay Protection and Efficiency
- R32 Refrigerant
- Genuine Care Warranty: 1 Year Unit Replacement (if parts and labour is not available), 6 Year Parts Replacement

GENUINE CARE WARRANTY COVERAGE GENUINE COMFORT

Intertek

MODEL IDENTIFICATION

Example: GCAA-E09KU235-3

GC	AA	-	E	09	K	U	235	-	3
Brand	Model Series		Heater Style	Cooling Capacity	Voltage	Plug Size	Heater Size		Version
Genuine Comfort	AA = AA PTAC		E = Electric Heat	09 = 9K BTU 12 = 12K BTU 15 = 15K BTU	K = 208/230V	U = Universal Multi-Function Electric Heater	2 = 2.3KW 3 = 3.2kW 5 = 4.3KW		

ACCESSORIES

*SOLD SEPARETELY

WIRELESS + WIRED THERMOSTAT

OCCUPANCY SENSOR THERMOSTAT

EMS THERMOSTAT

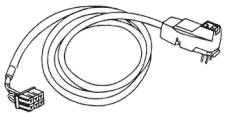

EMS THERMOSTAT

DIMENSION DRAWINGS

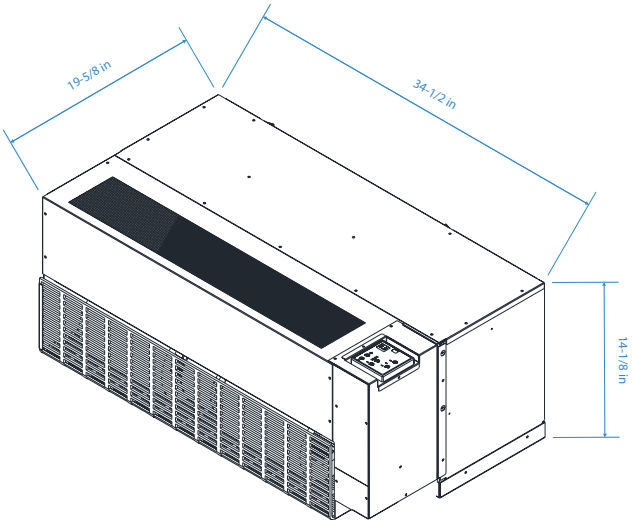

PLUG TYPE

TANDEM

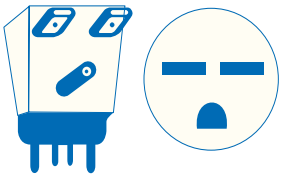

280V/230V 15A

PERPENDICULAR

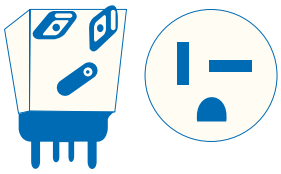

280V/230V 20A

LARGE TANDEM

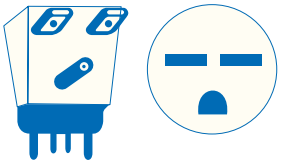

280V/230V 30A

INSTALLATION INSTRUCTIONS

ELECTRICAL SUPPLY

- Each unit must have a separate branch circuit protected by a fuse or breaker. Refer to the unit rating plate for the proper wire and breaker or fuse size.
- Use of extension cords is prohibited.
- DO NOT connect the GENUINE COMFORT unit to a circuit with an incorrectly-sized overcurrent-protection device.

Warning
High Voltage

Moving parts can cause personal injury. Avoid contact with moving parts when testing or servicing the unit.

ELECTRICAL SHORT HAZARD

Before opening the existing unit:

- Open the power supply disconnect switch. Secure it in an open position during installation. Attach a sign stating,"DO NOT TURN ON"
- On a plug and receptacle connection, unplug the existing unit at the wall outlet.
- DO NOT plug in the new unit until installation is complete and the start-up check list has been completed.
- Failure to comply with the above could result in severe personal injury,death or substantial property damage.

REMOVE THE OLD CHASSIS

1. Disconnect power or unplug cord before proceeding.
2. Remove the front panel to expose the old chassis.
3. Loosen any tie-down bolts or screws and remove the old chassis.

CHECK EXISTING WALL SLEEVE

GENUINE COMFORT replacement PTAC are to be used with metal wall sleeve:

a. Clean the wall sleeve of any dirt.
b. Repair any damage and rust.
c. Ensure proper drainage of condensate or rainwater to exterior of building.
d. Check the back of sleeve is pitched to the outside by ½ inch max.
e. Check the sleeve is level left to right.
f. Make sure the wall sleeve secured in the wall.

CHECK EXISTING OUTDOOR LOUVER

- Check whether the type of the outdoor louver match the baffle and insulation on the chassis, adjust if it doesn't match.
- Remove any obstructions

CHASSIS INSTALLATION

1. Check the seal foam on the rear of chassis, make sure to avoid the ventilation short circuit.
2. Slide the chassis into the sleeve until the front in the same level as sleeve.
3. Secure the chassis —Tighten any tie down bolts or screw as necessary.

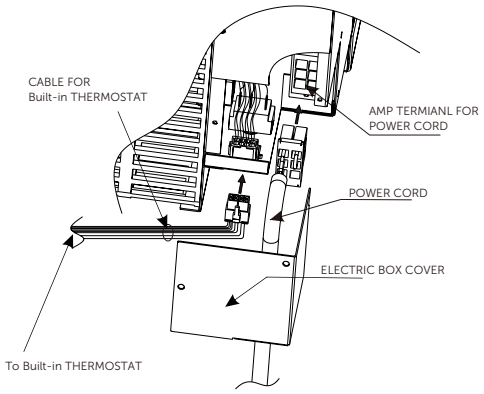

Fig. 1: Cable Connection

POWER CORD CONNECTION

1. Remove junction box cover by moving three screws. See Fig. 1.
2. Connect accessory power cord to unit. See Fig. 1.

   Pay attention—Different electric power require different power cord.

   See TABLE 1-POWER CORD CONNECTION CHART
3. Use wire clamp to attach power cord and cable for built-in thermostat to base pan, See Fig. 1.
4. Reinstall junction box cover.

Table 1 - Power Connection Chart

Unit Model		Code of Power Suppy Kit		
		30A	20A	15A
				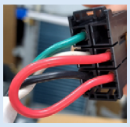
		208/230V		
GCAA	2300W	×	×	✓
	3176W	×	✓	×
	4276W	✓	×	×

BULIT-IN THERMOSTAT INSTALLATION

Connect the built-in thermostat cable with the chassis as Fig. 1.

Use wire clamp to attach power cord and cable for built-in thermostat to base pan, see Fig. 2.

Install the built-in thermostat as per the detail separate manual for built-in thermostat installation,

Connect cable from chassis to the existing wires in the wall as Fig. 3.

Ensure to wrap and make protection at the joint points.

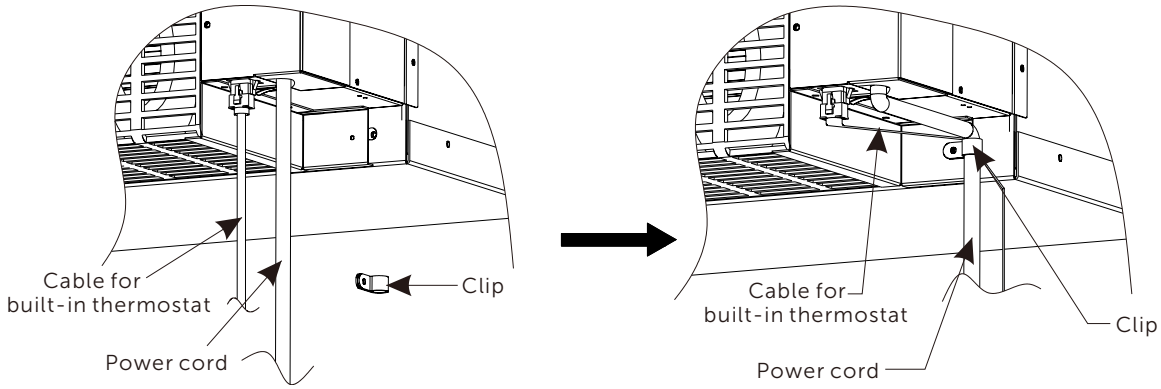

Fig. 2: Clamp Power Cord and Cable

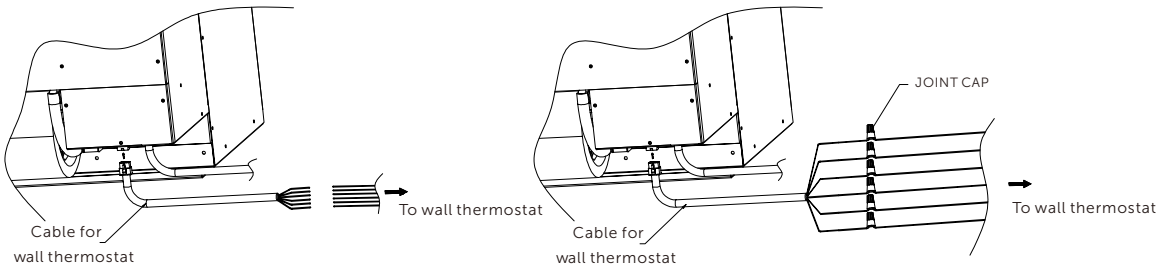

Fig. 3: Cable Connection for Wall Thermostat

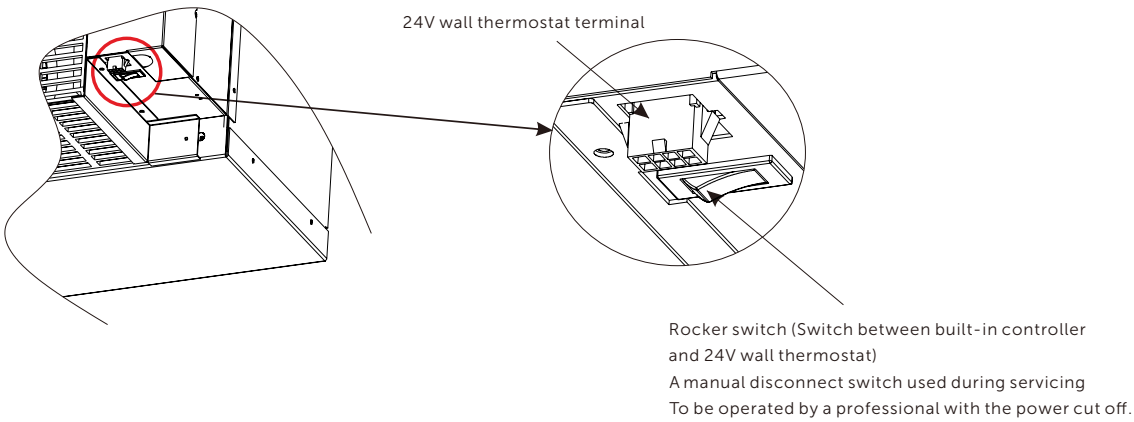

REMOVAL OF THE FILTER

Loosen the butterfly nut bolt, pull open the baffle, and remove the filter as Fig. 4.

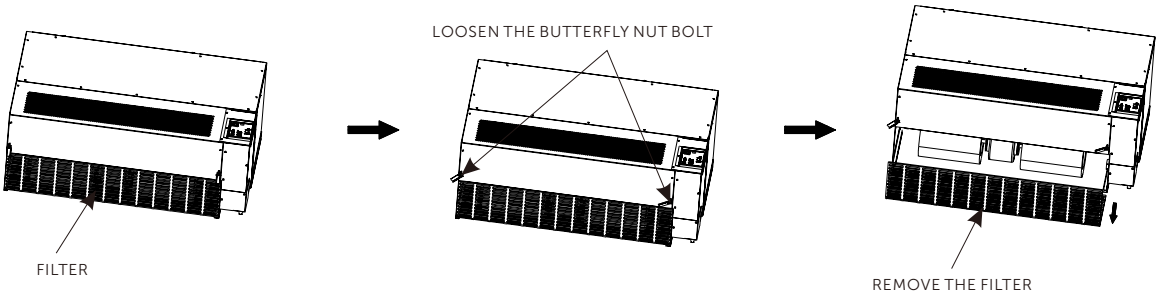

Fig. 4: Removal of The Filter

FRONT PANEL INSTALLATION

Insert the panel to the orbit of the chassis, as Fig. 5 and Fig. 6.

Ensure the panel screwed in proper location, see Fig. 7.

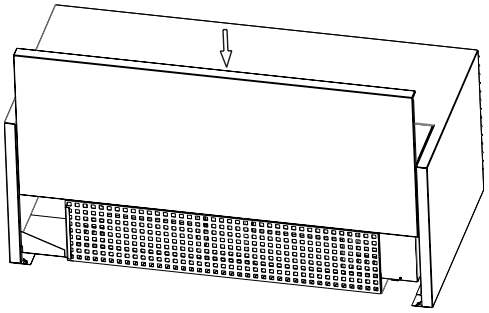

Fig. 5

FINAL INSPECTION AND START-UP

CHECK LIST

- Ensure the chassis is secured with the sleeve.
- Unit is installed in compliance with all codes.
- Circuit breakers and wire sizes are correct.
- Ensure the electrical supply matches the electrical requirements of the unit, and that the unit is properly grounded.
- Check whether the electric heat match the power cord.
- Filter clean and in place.
- All panels in place.
- Make sure the chassis is level.
- Verify that nothing will interfere with the room discharge air or the return air of the units.

  Examples:
  - Check for curtains or drapes that obstruct the air flow.
  - Check for plus carpeting that can obstruct the return air.
  - Items like these can cause serious damage to the chassis.
  - Ensure work area clean and free of debris.

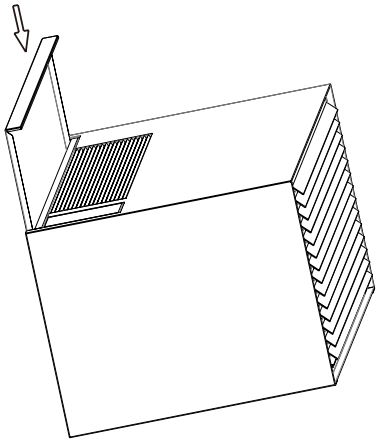

Fig. 6

START-UP

- Plug in the chassis.
- Turn on the chassis, and operate all functions:

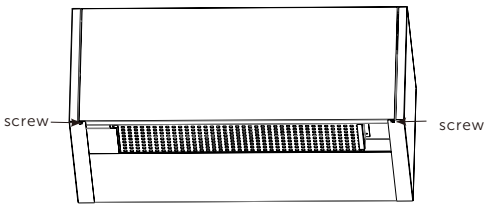

Fig. 7

SPECIFICATIONS

Model ID			GCAA-E09KU235-3	GCAA-E12KU235-3	GCAA-E15KU235-3
Power Supply	Voltage (1 Ph., 60Hz)	V	208/230V	208/230V	208/230V
Cooling	Capacity	Btu/h	9000	12000	15000
	Input	W	880	1154	1595
		EER	10.2	10.4	9.4
Indoor Air Flow (L/M/H)		CFM	265/340/380	250/330/375	250/330/375
Outdoor Fresh Air		CFM	-	-	-
Indoor Sound Level (L/M/H)		dB(a)	52 / 55 / 58	51 / 54 / 57	51 / 54 / 57
Outdoor Sound Level (L/M/H)		dB(a)	70	70	70
Unit Dimensions (W x H x D)		inch	34-1/2 x 19-5/8 x 14-1/8	34-1/2 x 19-5/8 x 14-1/8	34-1/2 x 19-5/8 x 14-1/8
Package Dimension (W x H x D)		inch	39 x 24 x 18-7/20	39 x 24 x 18-7/20	39 x 24 x 18-7/20
Net/Gross Weight		lbs.	119.05/133.38	125.66/140	127.87/142.2
Refrigerant Type			R32	R32	R32
Operation Temperature (Indoor)		°C	18 - 30	18 - 30	18 - 30
		°F	64.4 - 86	64.4 - 86	64.4 - 86
Ambient Temperature (Outdoor)		°C	10 - 43	10 - 43	10 - 43
		°F	50 - 109	50 - 109	50 - 109

SPECIFICATIONS (ELECTRIC HEATER SIZES)

Model ID			15A	20A	30A
Electric Heating	Electric Heater Size	KW	2.3KW	3.18KW	4.28KW
	Capacity	Btu/h	7848	10837	14590
	Input	W	2200	2895	3739
	Rated Current	AMPS	9.57	12.59	16.27
Max Input Consumption		W	2420	3185	4113
Max Current		A	10.52	13.85	17.89
Compatible Capacity			9 / 12 / 15K	9 / 12 / 15K	9 / 12 / 15K
Cord Type			LCDI-15A	LCDI-20A	LCDI-30A
Cord Length		Ft.	6.89	6.89	7

The electric heater size is determined by the power cord selected.

Manufacturer reserves the right to change specifications. Our products are subject to continuous improvements. Genuine Comfort reserves the right to modify product design and specifications, discontinue design without notice and without incurring any obligations. Warranty limited to Canada and USA. See warranty documentation for full details.